TOPIC: APPLICATIONS OF TRIGO

A flagpole of height $12.2\ m$ is placed on top of a building of height h metres. From a point T on level ground, the angle of elevation of the base of the flagpole B is 26° and the angle of elevation of the top of the flagpole C is 35°. Find the value of h.

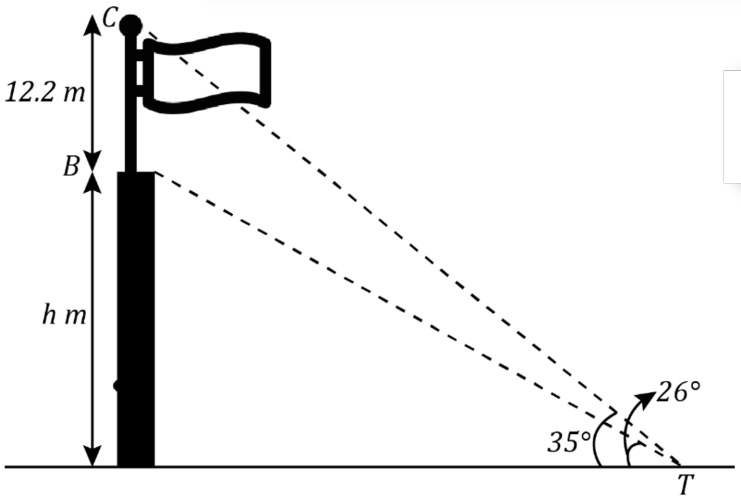

$$\sin\theta = \frac{opp}{hyp} \qquad \cos\theta = \frac{adj}{hyp} \qquad \tan\theta = \frac{opp}{adj}$$

YOUR ANSWER:

COULD YOU SOLVE IT? WATCH OUR TUTOR EXPLAIN:

OUR RESOURCE LIBRARY

1 UP TO DATE WITH THE LATEST SYLLABUS & TRENDS

2 POPULAR & PREDICTED TOPICS (PROBLEMS IN REAL-WORLD CONTEXT)

3 IN & OUT OF CLASS SUPPORT (NOTES, PLAYBACKS, ETC.)

4 STRUCTURED TO BUILD KNOWLEDGE SYSTEMATICALLY

MATH ACADEMIA YOUR PARTNER IN EDUCATION Indigo GROUP GO FURTHER

Practice Question I: [Level: Intermediate]

Common Mistakes:

The figure shows the internal structure of a beehive made up of regular hexagonal cells that can form tessellations with no overlaps or gaps.

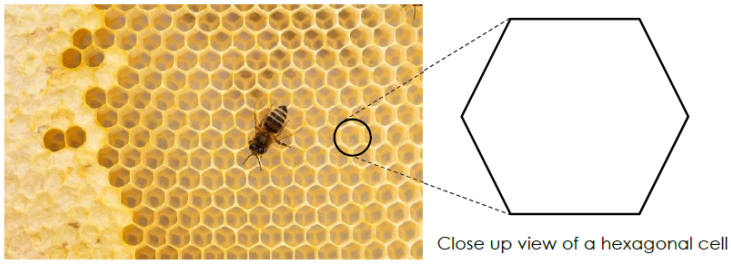

Close up view of a hexagonal cell

(i) Name another two regular polygons that can form tessellations and sketch their tessellations.

(ii) Why are these regular polygons able to form tessellations?
Hint: what do you notice about their interior angles?

(iii) Show that there are no other regular polygons that can form tessellations.

(iv) Suggest a reason why beehives are made up of regular hexagonal cells and not the other two regular polygons that can form tessellations too.

Notes:

- *Sum of interior angle* $= (n-2) \times 360°$.
- *Sum of exterior angle is* $180°$.
- *Sum of one exterior angle and one interior angle adds up to* $180°$

Secondary 1IP Math Topic: Triangles, Quadrilaterals and Polygons
Copyright © 2022 by Math Academia Pte Ltd
All Rights Reserved

STRUCTURE:

DIFFICULTY LEVEL

Providing questions of different complexities helps build knowledge, Helps parents/students assess where they stand and if they have achieved content mastery.

COMMON MISCONCEPTIONS

Addressing common errors made for this question, and clarifies doubts.

KEY POINTS

Highlights the concept or main idea of the question, and what is important to takeaway.

VIDEO PLAYBACK

Leads student to a recording of tutor teaching the question for reference during revision.

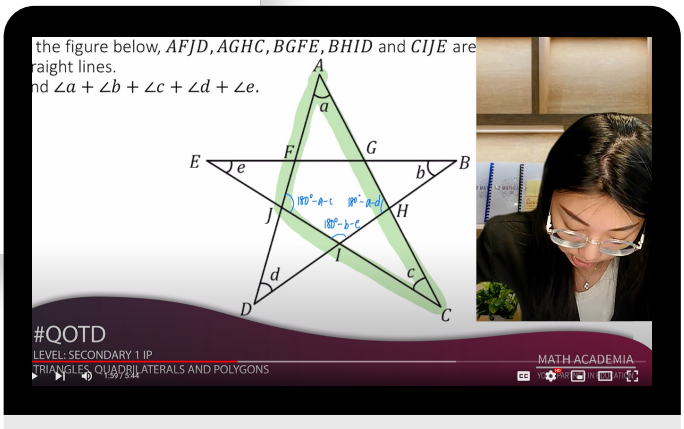

GO FOR **SPECIALIST**
NOT JUST GENERAL TUITION